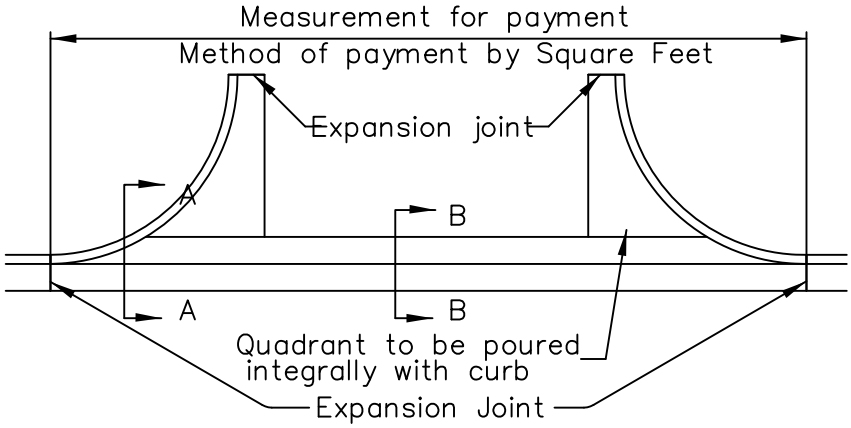

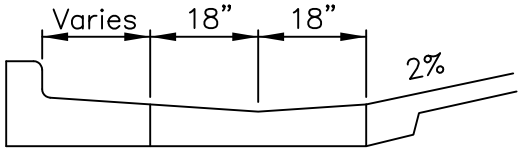

SECTION A–A

THRU B618 CURB AND GUTTER

This bituminous detail is the same for both sides of the valley gutter

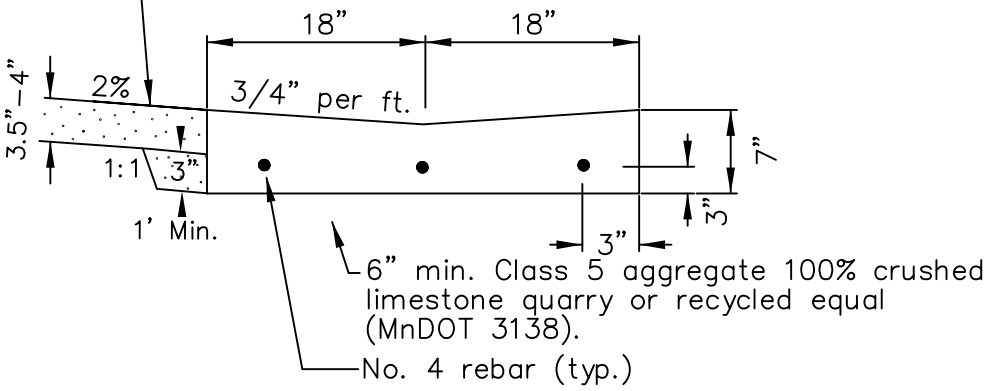

SECTION B–B

THRU CONCRETE GUTTER

MnDOT 3F52 concrete shall be used for valley gutter and wing apron.

CITY OF FARMINGTON
A PROUD PAST • A PROMISING FUTURE

STANDARD DETAILS

CONCRETE VALLEY GUTTER

FARMINGTON, MINNESOTA

Last Revision:
MAR 2017

City Plate No.
STR–10
2017

K:\STANDARDS\STANDARD PLATES\2017 STANDARD DETAILS\